ASC Global



InterCom GSM/4G

product line

GSM/4G DOORPHONE MODULES

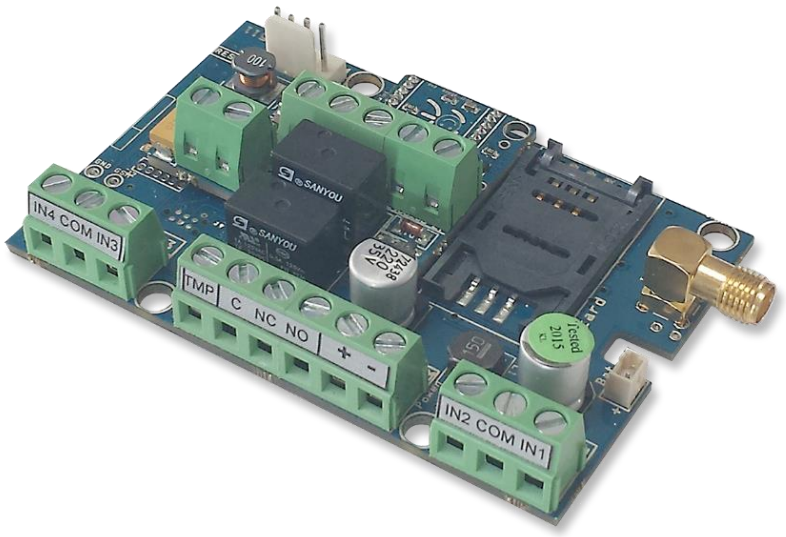

Table of contents

Device description and function 3
Module buildup 4
Figure 4: SIM card insertion 4
Installation guide 5
LED signals 6
Connecting the module (PC) 6
Establishing connection using a Bluetooth adapter 7
Programming using the PC software 7
Connecting process 8
Checking module status 9
Switching off PIN code request on SIM card 10
Event Log Readout 10
Saving controlling phone numbers 11
Adjusting outputs 11
Tamper settings 11
Power supply monitoring setup 12
Life signal sending setup 12
Anti Jammer System (AJS) settings 13
Available wiring diagrams 13
Figure 1: Comelit wiring diagram 14
Figure 2: Bticino wiring diagram 14
Figure 4: Fermax wiring diagram 14
Figure 3: Farfisa MD 30 wiring diagram 14
Figure 6: Kanrich S913 wiring diagram 15
Figure 5: Golmar ER5555 wiring diagram 15
Figure 7: Siedle wiring diagram 15
Figure 8: Urmet wiring diagram 15
Figure 9: BPT HA 200 wiring diagram 16
Programming with SMS commands 16
SMS command examples 19

Device description and function

The InterCom GSM/4G can be used as an accessory for external intercom units in systems of up to 4 flats, and also as a gate control unit. By using the InterCom module, a complete intercom system does not need to be installed, as mobile phones take over the role of the indoor unit. Depending on the intercom type, the existing indoor unit and the module can also be used in parallel.

It can be connected to 4+n wire intercom systems of up to 4 flats. One main phone number and one reserve phone number can be set for each flat. If the main phone number is not available, the module initiates a call to the reserve phone number. The ring time can be modified.

A voice call is established between the module and the mobile phone, which may involve call charges. Therefore, it is worth choosing the SIM card package carefully in order to keep costs as low as possible. The maximum call duration can also be set to avoid extra costs caused by long conversations.

After the call is answered, two-way communication is established between the person at the gate and the person using the mobile phone. The module allows the two outputs to be controlled separately during the voice call, so the gate can be opened remotely without ending the call.

The module is equipped with two relay outputs (the first is NO/NC, the second is NO), which can be activated during a voice call with buttons 4 and 6 on the phone. The outputs can be set to monostable or bistable mode.

Output control is possible by free call from an unlimited number of phone numbers. With caller identification, up to 1000 numbers can be stored in the internal memory of the module. Numbers can also be saved to the SIM card, depending on the SIM card type. Caller identification prevents unauthorized control.

The device allows the use of night suspend mode. This means that a time interval can be set during which the module will not initiate calls. In this mode, the outputs can still be controlled by incoming call.

The module can store up to 16,000 events, including input and output states, power supply resets, mobile network and module status information, incoming and outgoing calls, and SMS messages.

The tamper input on the module can be used as a sabotage indicator, with settings similar to the inputs. It can also be used for a reset function, allowing the module to be restored to its factory default state.

The built-in Anti Jammer System (AJS) protects against network jamming. A significant drop in signal strength or a network connection failure triggers an immediate alarm. In these situations the module tries to send notifications using the remaining network connection. An output can also be used to control an external siren.

Besides continuous voltage monitoring, the module also monitors signal strength. These data can be read out and displayed on a chart with hourly resolution using the programming and monitoring software.

The module can be programmed by SMS command, voice menu, PC or by Android mobile phone.



Figure 1: Device operation

Module buildup

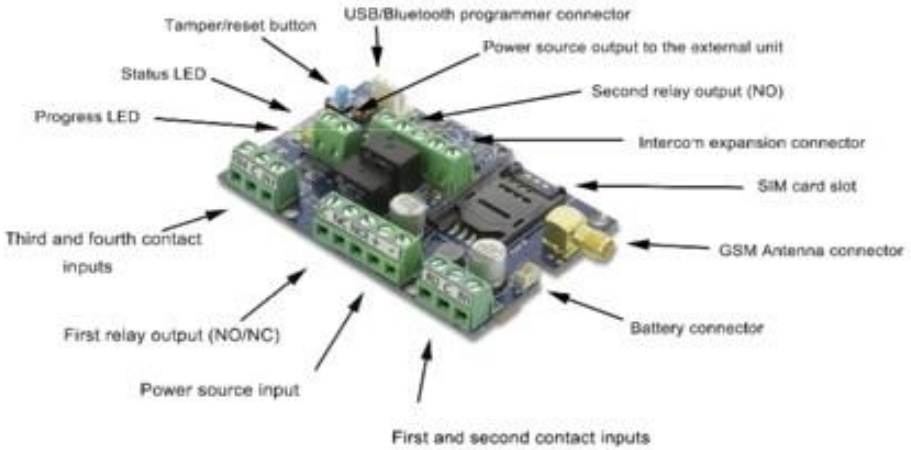

Figure 2: the buildup of the module

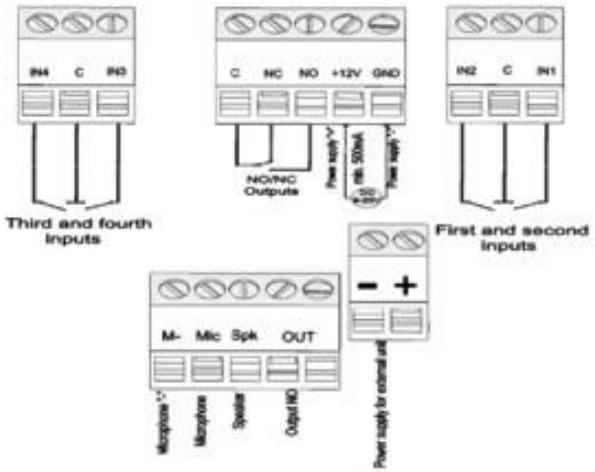

Figure 3: wiring diagram

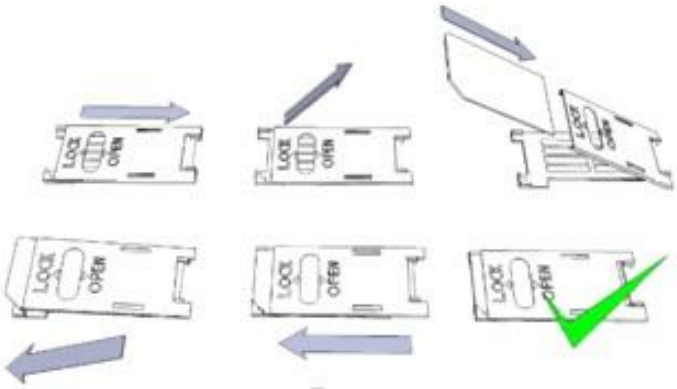

Figure 4: SIM card insertion

Installation guide

Technical parameters

- Power voltage: 9-20 VDC
- Standby power drain: 40 mA + external unit current consumption
- Maximum power drain: 400 mA + external unit current consumption
- Relay output load: max. 20V / 500 mA
- Network module type (GSM version): SIMCOM 800
- Network frequencies (GSM version): GSM 850 / EGSM 900 / DCS 1800 / PCS 1900 (Multi-Band)
- SIM card usage: network-independent module
- Antenna type: SMA connector (comes with package)
- Size: 78 x 51 x 20 mm, packed: 132 x 128 x 32 mm
- Operation temperature: -20°C - +50°C

Installation steps

1. Carry out a signal strength check with your mobile phone. If the signal strength is not sufficient at the installation site, change the module position before installation. Do not install the device where strong electromagnetic interference may occur, for example next to electric motors or alarm transformers.
2. Do not install in wet places or in areas with high humidity.
3. Connect the antenna and secure it with the SMA connector. If the signal strength is low, use a higher-gain antenna. The signal can also be improved by repositioning the antenna. Do not place the antenna under metal covers, as they can significantly reduce the signal strength.
4. **Disable the PIN code request, voicemail and call notification on the SIM card. New SIM cards may need to be activated (usually by making one outgoing call). Check the card validity. If you use a prepaid card, check its balance and usage options, for example whether it can be used for calls only.**
5. Caller ID must be checked for both incoming and outgoing calls. This function may need to be enabled separately by certain service providers.
6. Insert the SIM card in the SIM card slot of the module.
7. Connectors have to be connected according to the wiring diagram. If you are dealing with OC output (output of EXP Alarm expansion panel) mind the correct wiring of the relay protecting diode.
8. If you are working with OC relay be cautious especially of avoiding electric shock. A proper contact protection must be established. If you lack the appropriate experience ask for professional help.
9. Check if the power supply performance will be sufficient for the module. Mind the polarity. If wiring is reversed the module will not operate or might get damaged.
10. Now the device can be connected to the power supply.
11. If you have purchased also a battery connect it to the device. **Use only the appropriate battery for reserve powering the device!**
12. After connecting the power supply, the red LED lights up, indicating that the device is establishing connection with the
    mobile network (this can take up to 1 minute).
13. If the red LED goes off and the green LED flashes, the module is operational and connected to the network. The number of flashes indicates signal strength.

Power needed for programming can be supplied to the module also from USB adapter.

LED signals

The LED signals give essential information about the module, signal strength and actual error codes. By blinking we mean flashes between two longer pauses.

- The STATUS LED (green) gives feedback on signal strength based on the chart below:

Flashes	Signal quality
1	Bad
2	
3	Decent
4	Good
5	Excellent
LED lighted	Network connection rejected

- An ACT LED (red) lit means the initiation process at startup. At this phase module performs the initial checks. During operation this reflects an event (SMS or voice call).
- If the red and green LED are lighted simultaneously it tries to communicate an error that can be identified with the chart below:

Flashes	Error code
1	Initializing
2	Module error
3	SIM card not inserted
4	SIM card locked with PIN code
10	Modem mode

- Alternating red and green LED flashes indicate the reset function of the tamper input. This can restore the module to its original factory settings.
- To leave modem mode, open the modem status window in the service menu in the ProRead or restart the module

Connecting the module (PC)

Establishing connection using a *USB adapter*

1. Connect the USB adapter to the *Program* labeled slot of the module.
2. USB adapters can provide sufficient voltage for programming the module.
3. Attach the USB connector of the adapter to a USB extension cable and plug into any USB port of a PC.
4. **WARNING! If you are using older Windows operating system** the system offers an automatic driver installation. IMPORTANT, do not use the offered driver but carry on the installation with the **USB driver.**

Installing the USB driver manually

- ✓ get the required driver from our web site or from the ''USB driver''
- ✓ use the appropriate 32 or 64 bit version for your operating system in the installation process
- ✓ to check this use the Control Panel → System menu path
- ✓ connect the USB programmer to your PC
- ✓ do not chose the automatic installation offered by the system
- ✓ Open the path Control Panel → System→ Hardware ***Device Manager*** window.

✓ In this window search for ***Unknown device*** (which will be the programmer now, later the ***USB Serial port***). If you cannot find it start the "Scan for hardware changes" process from the upper window menu.
✓ Device properties can be achieved by double clicking on the unknown device.
✓ Start the Update driver process
✓ In the installation window choose the manual selection of the driver location then choose the appropriate folder containing the 32 or 64 bit driver
✓ *Click on the Next button to start the installation.*

- *Open the Device Manager (click on System→ Properties→Hardware tab → Device manager)*
- Search for a device named USB Serial port (COM…) under Ports
- If a driver reinstall is needed click on the device then choose driver removal then follow instructions
- Start the programming software.
- You have to set the value in brackets [USB Serial port (COM…)] in the programming software
- Establish a connection to the module.

Establishing connection using a Bluetooth adapter

1. Connect the Bluetooth adapter to the module and provide power to it.
2.Switch on the Bluetooth connection possibility on your device (PC or Android mobile phone).
3.Search for programmer with the help of your Bluetooth enabled device.
4.After finding the adapter you can pair your PC/smart phone with the adapter using the code "1234".
5.Search for the COM port number of the connection (usually under *Properties* → *Hardware* tab)
6.Search for the COM port number of the connection (usually under *Properties* → *Hardware* tab)
7.Set the port number also in your programming software (PC) or choose the automatic port finding option.
8. Establish a connection to the module.

If you use Windows 8 operating system the programming software should be started in "Windows XP SP2/SP3" compatibility mode (Right click on the starting icon of the program → Properties → Compatibility)
In every case you can check the connection if you see the connected module name next to the Start button in the programming software and the green LED on the programmer starts to flash.

If you have a connection established between the adapter and your PC or mobile phone you can start the module configuration.
- By clicking the Start button after the connection was established modules settings will be acquired.
- By clicking the Start/Default config button (after a confirmation) it will revert back the module to factory settings.
- Using the Android application settings are always acquired after establishing a connection.

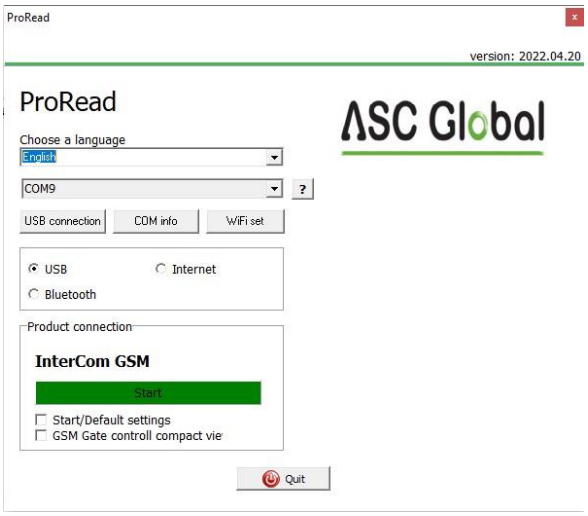

Programming using the PC software

- If you have chosen configuration by PC you can use our software that is freely downloadable from our website
- The program runs automatically, no installation needed
- Compatible with operating systems Windows 7, 8 and 10
- Make sure you always use the latest software!
- If a newer software version is available, update the module before the first configuration.

Connecting process

- To program the module choose between USB or Bluetooth connection.
- Below the language selection in the scroll down list (COM 4 in the picture) you can select the port through which you would like to communicate with the module programmer. You can find this value (in Windows operating system) under Device manager → Com port at the connected programmer. If you cannot decide you might let the program to search for it by pressing the ***automatic COM port finding***. The automatic COM port search might take several minutes.
- If the connection was successful you will see under the Product connection tab the name of the module.
- Clicking the ***start*** button the software connects to the module and reads out its settings.
- By clicking the ***Start/Default config*** button the module will be set back to default factory settings after the connection was established. (Before the operation the software asks for confirmation if this feature has not been switched off before).
- If you do not want to attach a module just to inspect the settings options you can select the ***Products-tryout*** window where you can freely make a specific module properties selection and also module preprogramming.

Compact view

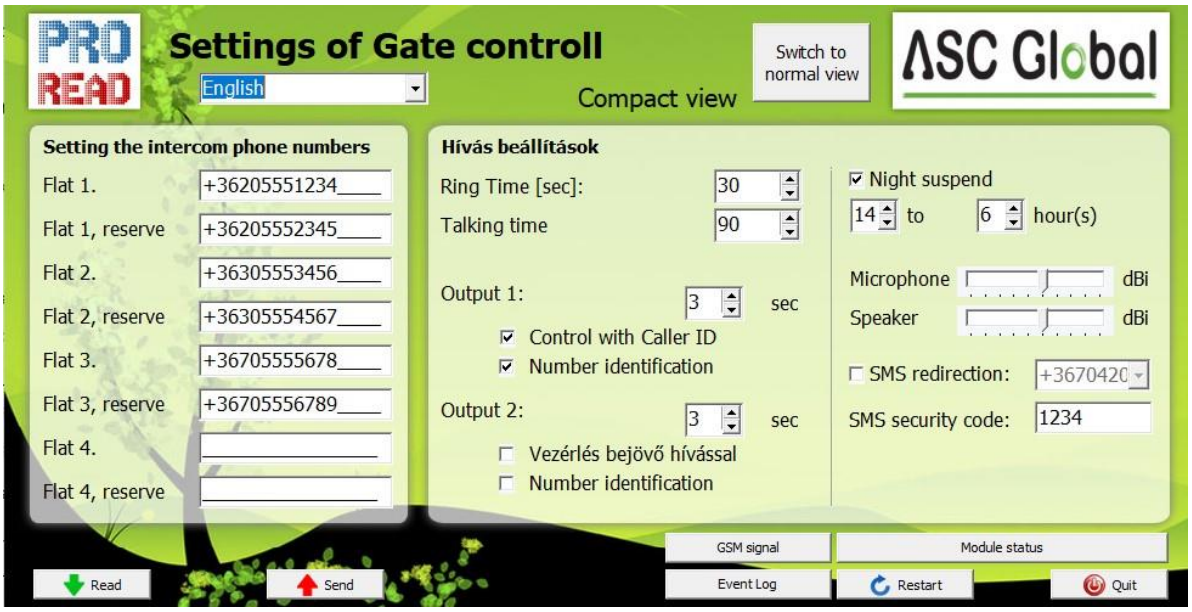

The most important settings, which are necessary for the programming, are summarized on the compact view. By clicking on the switch to ***normal view*** button we can return to the original programming surface.

On the compact view the following data can be given:

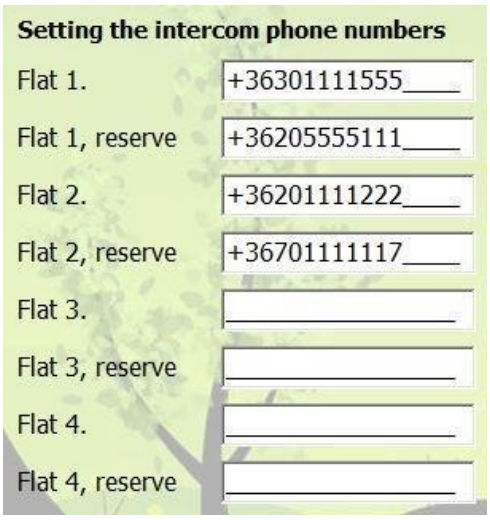

- Here you can give the phone numbers to which you would like to send SMS or voice call. **The numbers here have to be in international form in order the stabile working!**
- (Ex.: +36201111155 or 0036201111133).
- You can give phone numbers to 4 flat (the buttons are linked to the inputs of the module that belongs to the certain flat)
- When the ring time expired, and the primary number did not answer the call, the reserve numbers will be phoned
- This list can be modified with SMS as well, with the „Telxxy=Phone number" command. Here the „xx" indicates the number of the flat, the „y" indicates that it is main (1) or reserve number (2) (Example: 1234TEL011=+36301234567, 1234TEL012=+36302222233) You can read more information about the SMS commands on Page 18.

The ***ring time*** determines how long the module is trying to reach the certain phone number. If the ring time expired and the called number does not answer the call, the module will phone the reserve number that belongs to the certain flat. We can determine how long the external unit can be after answering the call.

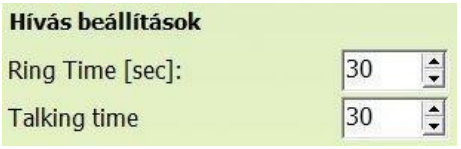

The talking time is the time available for communicating with the person in front of the InterCom. Even if the call is ended on the mobile phone, the InterCom module does not initiate a new call until the talking time has expired. It is advisable to set a low value here to avoid high SIM-related charges.

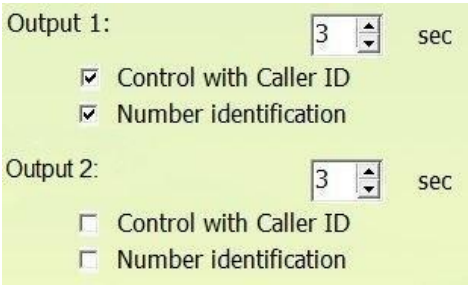

- By default the two outputs work in monostable mode.
- Here you can give the control time of the output. The maximum value is 65.000 seconds.
- We have the possibility to manage the outputs with or without caller identification.
- Without caller identification, anybody can activate the outputs who knows the phone number of the SIM card.
- In case of caller identification, the module rejects the initiating of the control from numbers which are not in the control number list. This function contributes to the protecting of the device, which is connected to the output, from the unauthorized control.



- By switching on night suspend mode, call initiation can be temporarily disabled; the module will not initiate calls. The blocking applies to all flats. A restart may be required.
- The gate or door can be managed during the night suspend time as well.

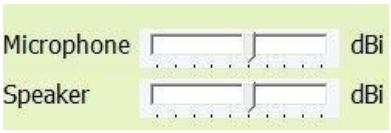

- By configurating the signal level of the microphone and the speaker, you can modify the speaker volume and the sensitivity of the microphone of the device which is connected to the InterCom GSM/4G.
- It is crucial that the module is not equipped with an internal amplifier for the speaker so that it has to be ensured by the external unit. In case of lack of amplifier, any kind of 0,5-1 W amplifier can be appropriate.
- You can require SMS forwarding to one of the eight phone numbers. **Attention!**
  - **Never choose the module's own phone number here!**
- Also, here you can modify the SMS security code. With this code, you can
  - configurate the settings of the module after set up. (in case the certain configuration does not require direct connection to the device)

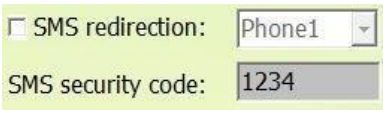

- At the bottom of the screen, you can read out the event log and signal strength. Here you can also check the current state of the module.



Checking module status

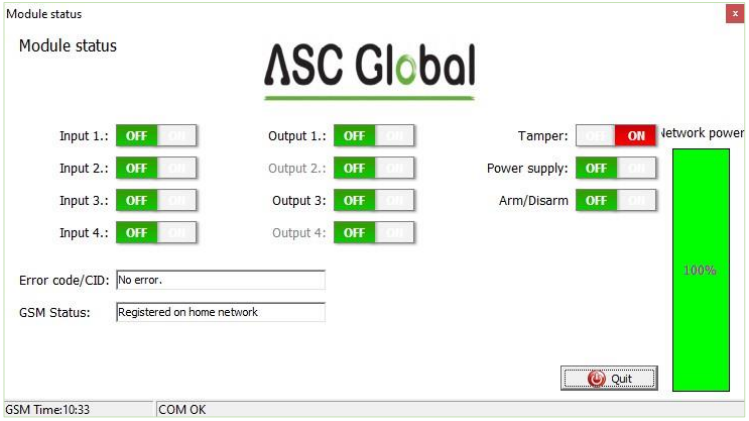

You can reach the actual status through ***Maintenance → Show module status*** button

By the module status query you will be informed of the followings:

- input statuses
- output statuses
- Tamper sabotage notification
  power supply failure notification
- armed/disarmed module status
- displaying occurring error/event codes (ex.: no SIM card inserted, SIM card locked by PIN code)
  checking Contact ID code (to monitoring station) sending process (ex. handshake status)
- Network connection status (ex. connected to the network, roaming, no connection, connection rejected) and actual signal strength (refreshing in seconds)

Switching off PIN code request on SIM card

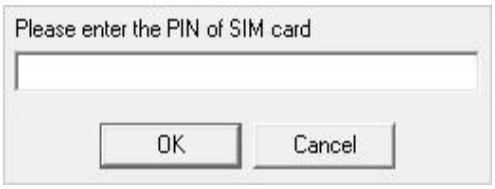

Before inserting SIM card in the module the ***PIN code request should be switched off***

- If you have not done yet then you can switch off at
  - ***Maintenance→ Switch off PIN code request***.
- You will see the following window, where you can input the code and its request will be switched off.

Event Log Readout

The event log can be viewed by clicking ***Maintenance →Read Event Log*** button:

- It can store up to 16,000 events; the newest entries appear first
- The acquired list can be saved in ''csv" file for later examination. This can be done also in the event list by clicking
  - the ''Open csv" button.
- In the ***Token*** column there are short event information.
- In the Date column, notification dates are stored. IMPORTANT! The date will be accurate if the module clock is synchronized with a PC or the mobile network. The latter is done automatically when connected to the operator network.

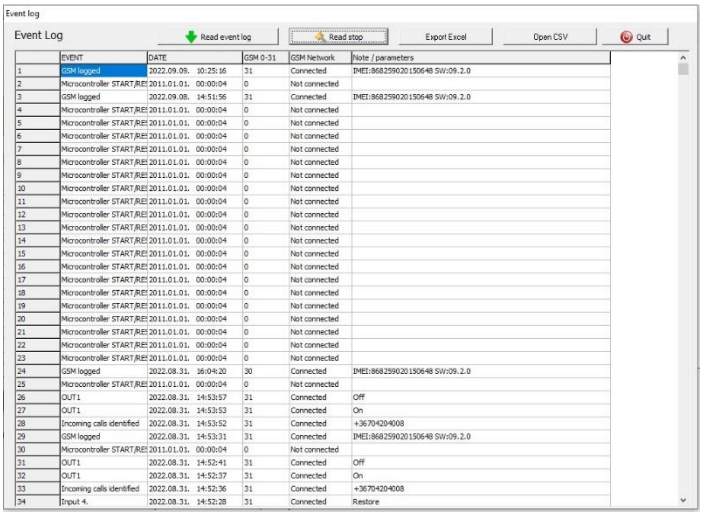

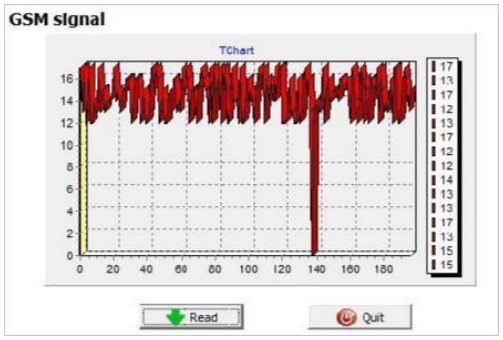

- The 0-31 value indicates signal strength at the time of creation. 31 is the highest, while 0 indicates no connection.
- Network indicates if the module was connected to the network carrier at the time of creation.
- In the ***Comment/parameter*** column notification related extra information are stored.
- Initially the chart is empty; the readout can be commenced by pressing the ***Readout event log*** button.
- The newest data will appear at the top of the list followed by
- older entries as you go down the chart.
- If the whole chart readout is not necessary you can stop it with the ***Readout stop*** button.

Read out list can be exported from the software in ''csv'' (ex. Excel) chart so later it can easily be sent and stored.

Saving controlling phone numbers

- At the control phone numbers section you can set telephone numbers that can control the outputs.
- Phone numbers can be stored in the memory of the module (maximum 1,000 pcs). Moreover, additional phone numbers can be stored in the SIM card.
- By using inner memory, the module will be independent from the SIM card memory.
- Always read out the memory before editing the list with the ***Readout numbers from memory*** button. For saving use the ***Save numbers to memory*** button.

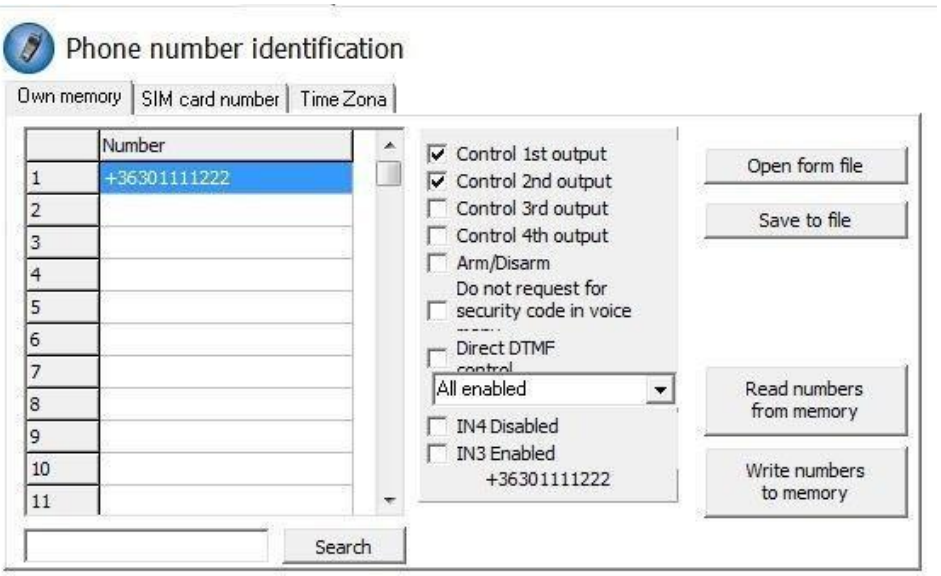

- **Stored numbers must be in international format**. Due to number length using "+" is suggested (ex.: +36301234567)
- Storing, editing and opening of numbers are also possible (from .csv file).Controlling numbers can be associated with specific outputs.
- The list can be modified also by ***SMS command*** with ***ADD=phone number*** (addition) and ***DEL=phone number*** (removal) commands (Example: 1234ADD=+36301234567, 1234DEL=+36301234567)
- You can find additional information on **SMS commands** on page 20

Adjusting outputs

On the ***Output*** window the output settings can be changed. The output type can be ***monostable*** namely one statused, (switches for the given period than reverts back to the original status), or ***bistable*** namely two statused (it only will revert back to original state after a new controlling).

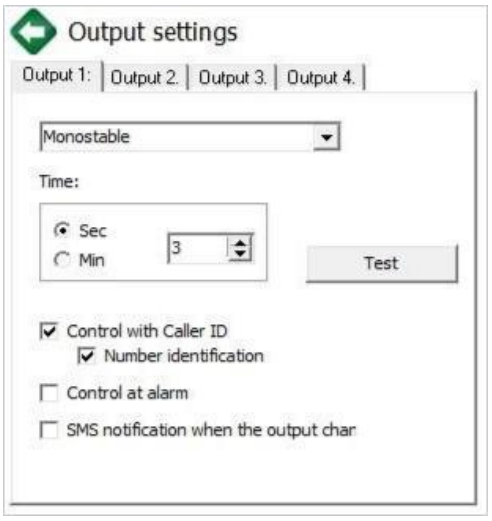

- Regarding monostable operation switch time can be set in seconds or minutes. This can be max 65,000 seconds.
- The **Unsuccessful SMS** means output will be controlled when network operator rejects an SMS sending.
- Choosing network fault means the output will be controlled until the network returns to its normal state.
- Regarding output controlling it can be set if you want to control with incoming call or it should be activated by an alarm event

Tamper settings

The module supports tamper protection. The purpose of this protection is to trigger an alarm if the device case is removed.

- Its connector is next to the first output shared connector of the main panel. Connector usage is similar to input: only suitable for monitoring short or open circuit. Connector must be connected according to the wiring diagram. You can use any shared input terminal. DO NOT USE SHARED OUTPUT TERMINAL (C).

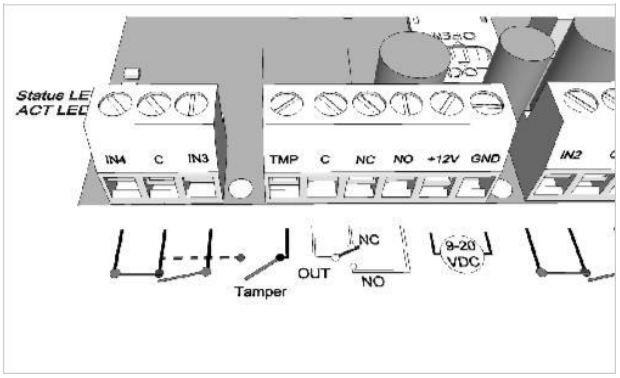

Connect the Tamper (TMP) connection point with the Common (C) point of the inputs

Power supply monitoring setup

The device is able to monitor its power source and send notifications about problems.

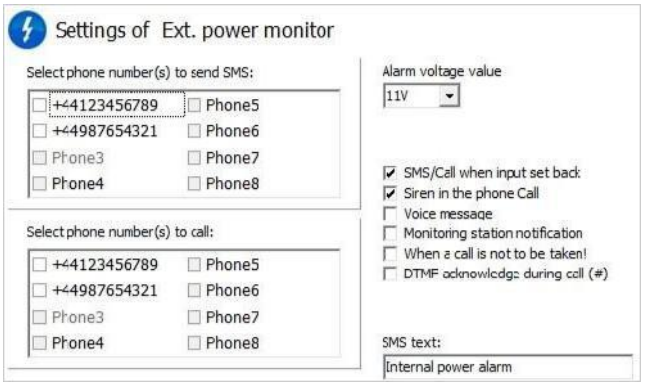

- On the **Power monitor** tab the trigger voltage level can be set. Below this the module sends an alert. Our Pro series modules have battery connectors that can be used to connect the Pro Battery.
- IMPORTANT! Modules without auxiliary power
- Supply will switch off if there is no main power supply.
- The remaining function settings equals with the input settings.

Life signal sending setup

- By life sending the user can be sure about the flawless operation of the system.
- The life sign periods and also exact hour can be set for notifications.

To use this feature *Send life sign* check has to be selected!

- It is also important the day of the first signal can be scheduled not to arrive on the setup day. The life sign activation day can be set.
- You can modify life sign sending with the following SMS command: 1234LIFETEST=cccssttttttt
- ccc → sending cycles/days (ex.: 007 days)
- ss → hour of sending on a day
- tttttttt → which telephone number will be notified (ex.: 00100000 → it will send the message to the 3 rd phone number)

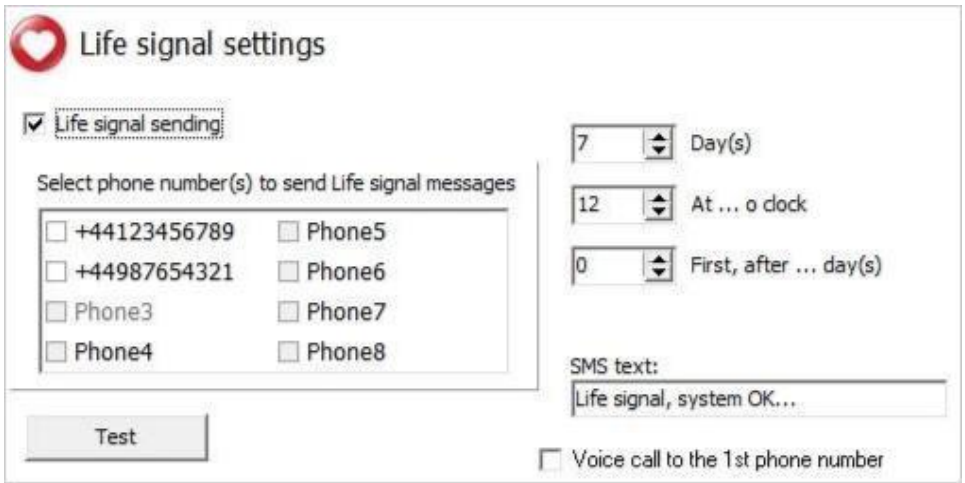

Anti Jammer System (AJS) settings

- By using a network jammer, the module can be sabotaged by heavily suppressing the network signal strength or by its complete suspension. The Anti Jammer System (AJS) monitors changes in network signal strength.
- You can set which output you would like to control instantly when there is an Anti Jammer System event. In this situation it will control a peripheral device connected to its output (ex auxiliary siren).
  Sending SMS/making voice call can be achieved only if there is still some connection with the network. If there is no connection sending will be completed when network signal is available.



Available wiring diagrams

Attention! The wiring diagrams were made for the specified brand/type. If your device has a different layout or terminal names, please read the manual of that device.

Before setup, check the following:

- The power supply provides sufficient current for both the module and the external unit.
- The SIM card used for the module is activated and capable of making and receiving calls.
- The device is wired appropriately to the microphone and speaker of the external unit.
- The volume of the external unit is adjusted properly (when we switch on the device first time, it is advisable to set the speaker and microphone potentiometer in middle position). If the InterCom GSM/4G provides the power to the external unit, the voltage to the external unit has to be set properly (The voltage can be modified with the potentiometer, next to the outgoing power connector, between 5-15 V).
- If the module supplies power to the external unit, the module power input must be connected to the appropriate place.

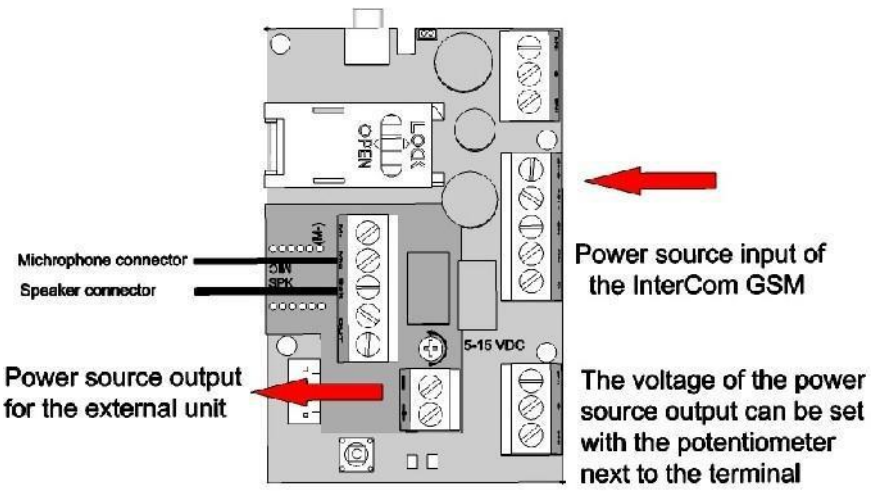

- If you connect the power source to the wrong place, the device may be damaged or fail.
- On the figure it can be seen that the power source of the InterCom has to be connected to the main panel to the indicated connector.
- The power source of the external device can be available on the indicated place on the little panel which is placed on the main panel.

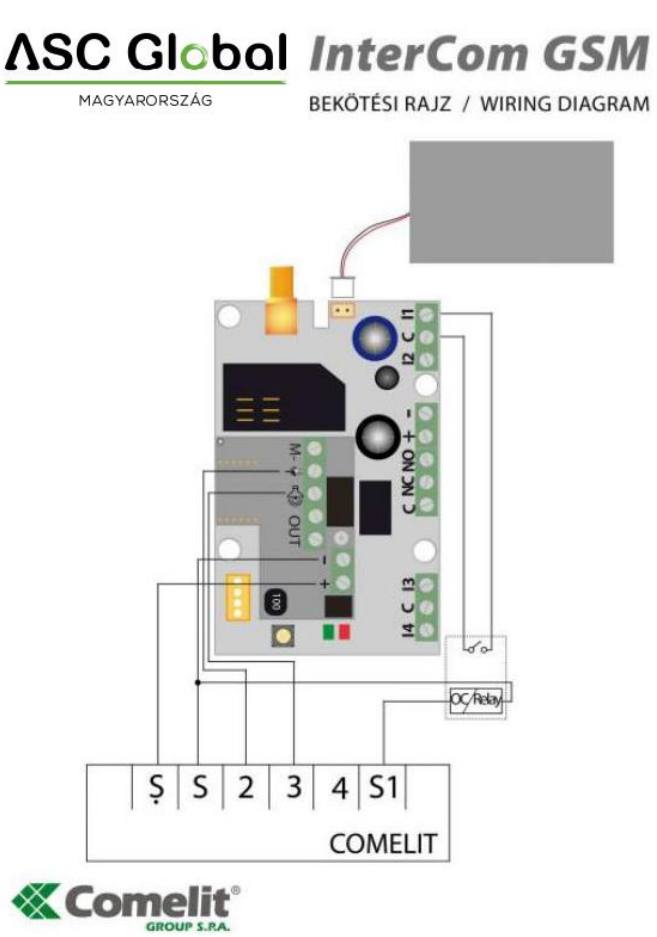

Figure 1: Comelit wiring diagram

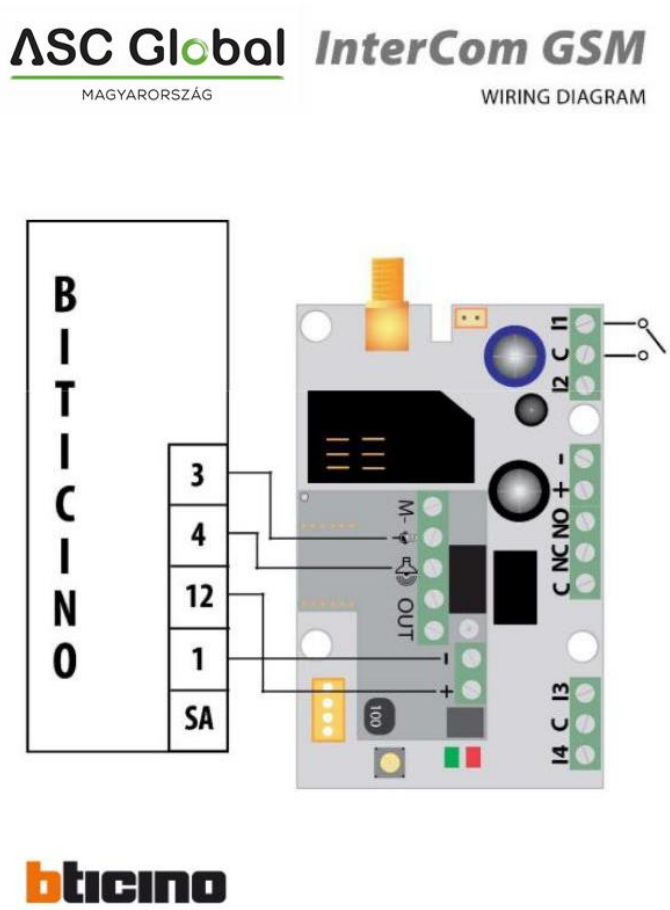

Figure 2: Bticino wiring diagram

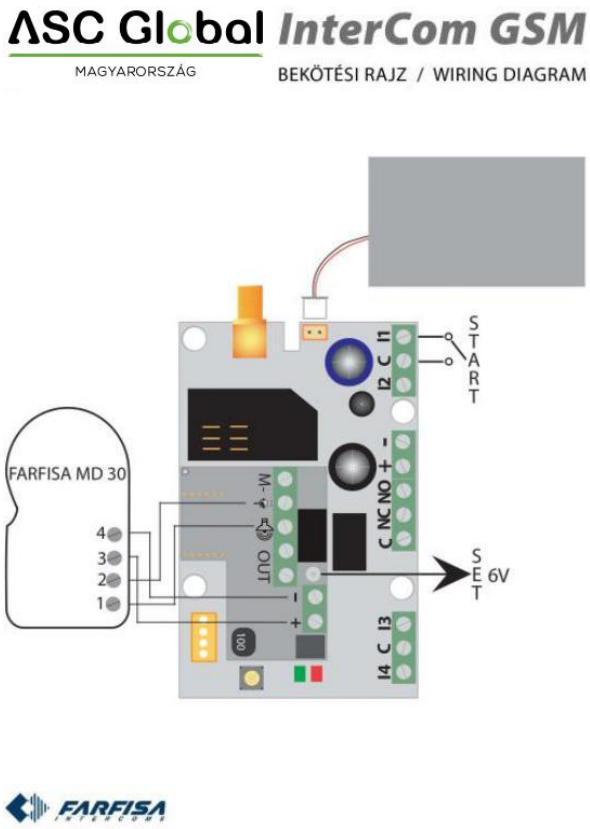

Figure 3: Farfisa MD 30 wiring diagram

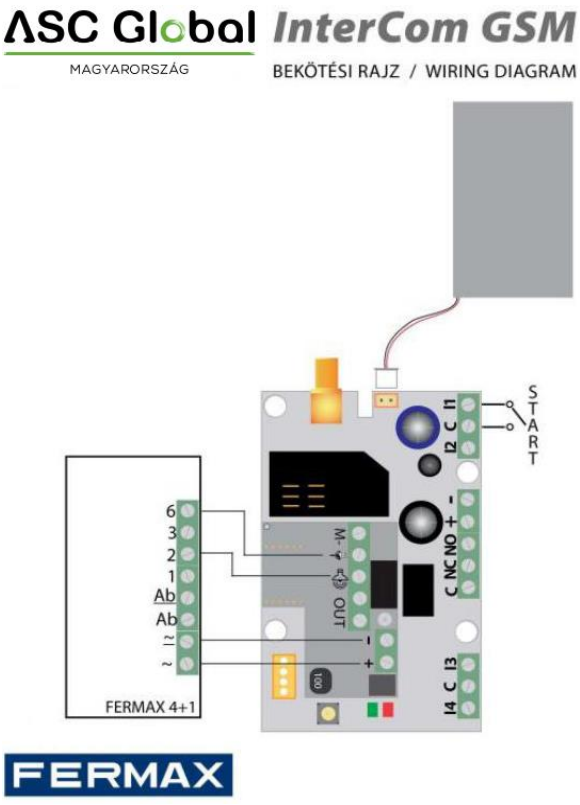

Figure 4: Fermax wiring diagram

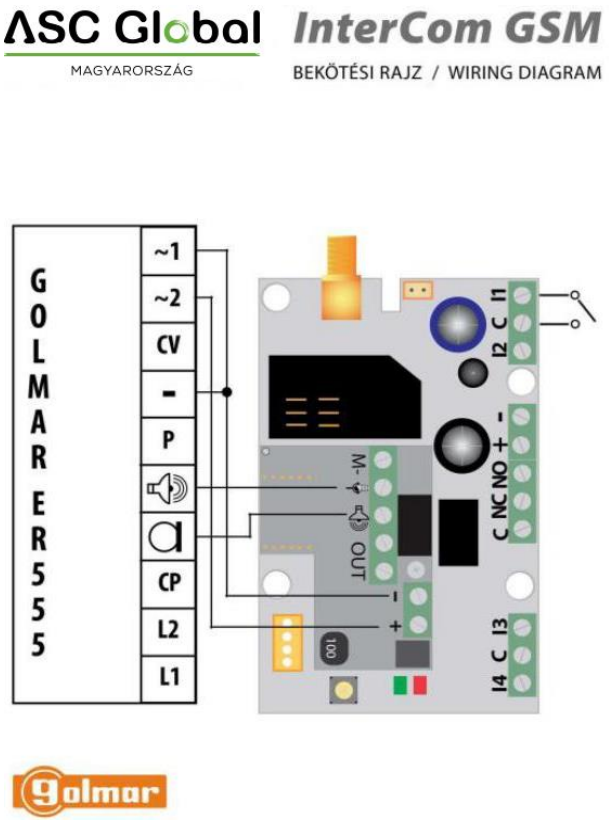

Figure 5: Golmar ER5555 wiring diagram

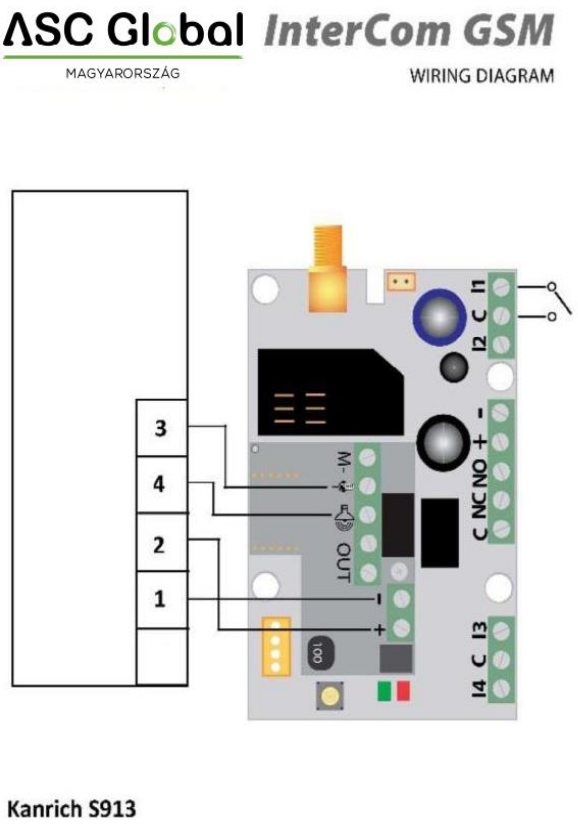

Figure 6: Kanrich S913 wiring diagram

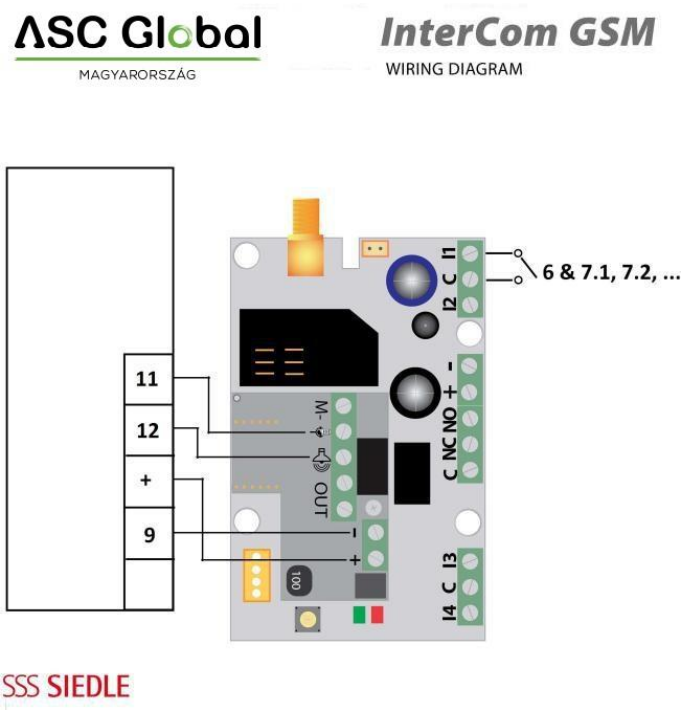

Figure 7: Siedle wiring diagram

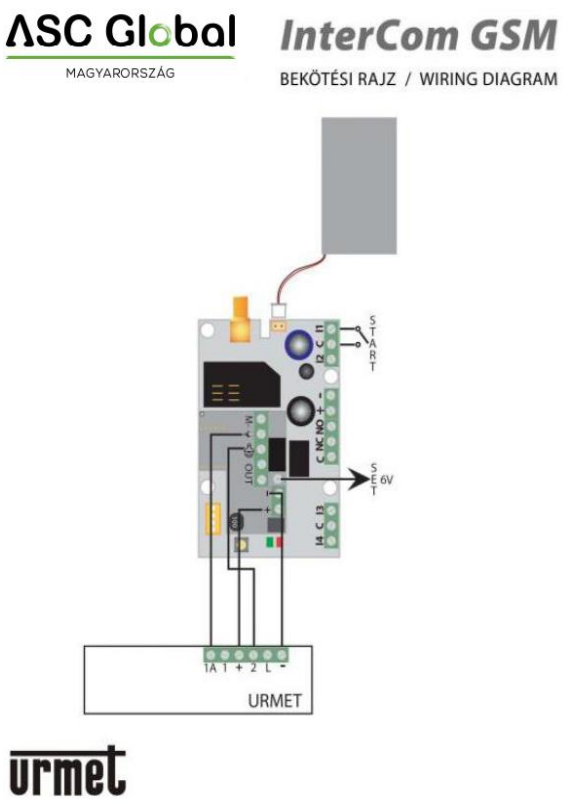

Figure 8: Urmet wiring diagram

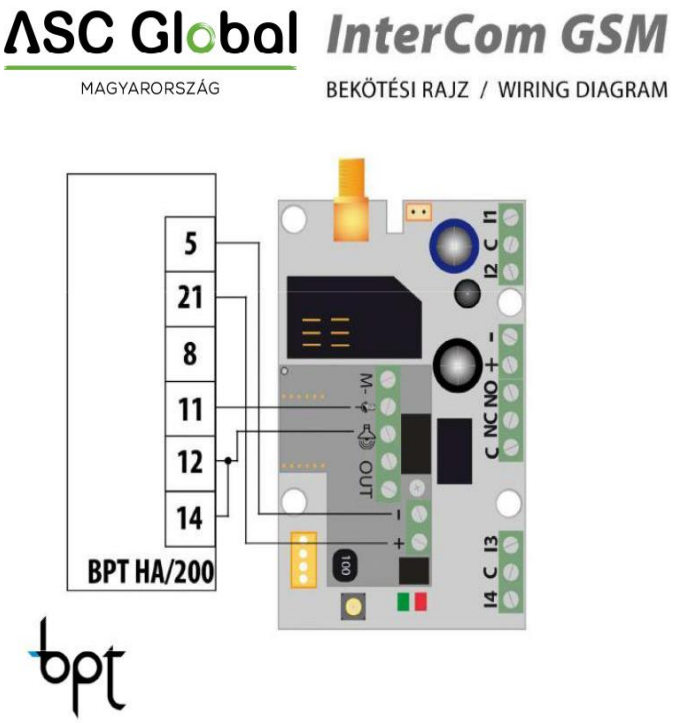

Figure 9: BPT HA 200 wiring diagram

Programming with SMS commands

The module can also be programmed by SMS commands. SMS messages always start with the security code, which can be modified at any time. Commands can be combined, but the SMS length must remain under 160 characters. The module (if it is possible) will send reply SMS after every message. You can switch this off with **NO SMS** command or with the **RECALL** command when the module makes a call to confirm the successful programming. Command criteria:

- cannot contain accented characters
- command characters must be capital letters
- commands must be separated with a space
- besides = you can also use #.
- messages have to start with security code that is followed by first command without space
- SMS text command has to end with # character

Command List

Description	SMS command		x value		value after = sign	Example
editing SMS security code	CODE			=	new security code	**1234CODE=4321**
adjust clock	CLOCK			=	yymmddhhmm yy: year, mm: month dd: day, hh: hour mm: minute	1234CLOCK=1401200922 Date will be: 2014.01.20 09:22
save telephone number for caller identification	ADD			=	telephone number (with +36)	**1234ADD=+36305551234**
removing telephone number from caller number identification list	DEL			=	telephone number (with +36)	**1234DEL=+36305551234**

saving/editing telephone number for notification	TEL	x x y	xx: main phone number of the flat Y: reserved phone number	=	telephone number (with +36)	**1234TEL011=+36305551234**
input setup	INPUT	x	input ordinal number	=	tnneeeeeeee t:0 → switched off, 1→24 h normal, 2→ backup; 3→ normal alarm 4→ delayed alarm nn→ NO or NC eeeee..: Other parameters: 1.e=1→ send SMS of status revertion 2.e=0→ compulsory 0 3.e=1→siren sound 4.e=1→voice message 5.e=1→remote surveillance 6.e=1→ no need to pickup when calling 7. e=1→DTMF confirmation (#) 8. e=0→ compulsory 0	**1234INPUT1=INC00100000** First input is: -24 h normal -Normal Close - not sending SMS when reverts back to initial state - plays siren sound when calling - no voice message - no remote surveillance notification - when calling must be picked up -no need for DTMF confirmation
Output setting	OUTCONF	x	output serial	=	iiiiirhn iiii→if 00000 then it will be bistable, otherwise it is the duration of control in seconds r→ controlled when alarm h→controlled when call n→=1→ without caller	**1234OUTCONF1=00003110** output is in 3 seconds monostable mode, it can be controlled by call and alarm and number identification is a must during a call

					4th etc.)	
Setting up notification sending	SEND	x	1:1st input 2.: 2nd input 3.: 3rd input 4.: 4th input 9.: tamper 10.: power source monitor 12.: life sign	=	ssssssssvvvvvvvv ssssssss→ selecting phone numbers for SMS notification (0 or 1) vvvvvvvv→selecting phone numbers for call (0 or 1)	1234SEND2=00100000111 10000
	SMSTEXT	x	1.: 1st input 2.: 2nd input 3.: 3rd input 4.: 4th input 9.: tamper 10.: power source monitor 12. :life sign 16.: reverting text	=	SMS text ending with *. Text must not contain accented character!	1234SMSTEXT1= alarm text*
Forwarding inbound SMSs	REDIR			=	phone number serial from 1 to 8	1234REDIR=2
Setting ringing time	RINGTIME			=	from 001 to 255 (in seconds)	1234RINGTIME=030 rings for 30 seconds
Maximum time of speaking	CALLTIME			=	Maximum time of speaking (from 001 to 255) in seconds.	1234CALLTIME=030
Night suspend mode	NIGHTDIS				OFF: function blocked aa: the beginning of the blocking in hour bb: the end of the blocking in hour	1234NIGHTDIS=23,06
Requesting module status information	INFO	Command				1234INFO
no SMS after SMS programming	NOSMS	Command				1234command1 command 2 … NO SMS
output control	OUT	x	output numbers	=	ON→switch on OFF→switch off RUN→controlling according to settings sssss→ controls the output for a limited time (in seconds)	1234OUT1=ON Output 1 switches on 1234OUT2=OFF Output2 switches off 1234OUT3=RUN Controlling output 3 1234OUT4=00003 Output 3 switches on for 3 seconds

Life sign sending	LIFETEST				cccsstttttttt ccc→cycle time, how often to send message (ex: 030 days) ss→on the given day at what time (ex: at 12 o'clock) tttttttt→which telephone number to choose from the 8 ex: 00100000→3rd phone number, 01010000→2nd	1234LIFETEST=00711001001007 -in 7 days -at 11 a.m. -sending to 3rd and 6th telephone number
Restarting module	RESTART	Command				1234RESTART

SMS command examples

1st message: input setup and selecting 3rd telephone number for notification. Sending SMS and voice message to the 3rd number.

5384TEL3=+36201255335 CLOCK=1401200922 INPUT2=4NO00100000 SEND2=0010000000100000

SMS text is the following:

5384 → SMS security code; every new SMS can be started with this code (to change it, use the CODE command. Default code: 1234)

TEL3=→changing 3rd telephone number for notification. Give the number in international format.
CLOCK= change the date to the following: 2014.01.20 09:22
INPUT2=→ setting 2nd input to the following: delayed normal open input that sends siren alarm when there is an event. **SEND2**=→second input sends SMS and voice message to the 3rd telephone number

2nd message:

- to modify the SMS text of the second input
- output and life sign message setup and
- saving an output controlling number for controlling
- finally modify the SMS security code

5384SMSTEXT2=second input alarm OUTCONF1=00003010 ADD=+36705553456 LIFETEST=007123000100000 CODE=2345
SMSTEXT2=→modify SMS text of second input. No accented characters!
OUTCONF1=→ output setup: monostable for 3 seconds with caller identification
ADD=→Adding telephone number to caller identification
LIFETEST=→sending life signal weekly at 12:30 to the 3rd telephone number

Further InterCom GSM / 4G module types



InterCom GSM Kit 1 / 2 / 4 / InterCom 4G Kit 1 / 2 / 4
InterCom GSM Kit Emergency / InterCom 4G Kit Emergency





InterCom GSM Monitoring Set
InterCom 4G Monitoring Set



InterCom GSM Emergency Caller
InterCom 4G Emergency Caller

Description and operation of the modules

The InterCom GSM and 4G product range offers solutions in various designs for use as door entry systems, lift call systems and emergency call systems. The appropriate model can be selected from the Kit, Monitoring Set and Emergency Caller variants based on the installation location and intended use. The devices provide two-way voice communication via the mobile network, so it is not necessary to be on site to answer a call. They require a power supply, an active SIM card, an antenna and adequate mobile network coverage to operate.

InterCom GSM Kit 1 / 2 / 4, Kit Emergency, Kit Forest; InterCom 4G Kit 1 / 2 / 4, Kit Emergency, Kit Forest



These outdoor door phones, designed for surface-mounting on walls, are available with 1, 2 or 4 metal push-buttons, i.e. in versions for 1, 2 or 4 flats. There is no need to install a separate indoor unit or the cabling required for it, as users' mobile phones take on the role of the indoor unit. The nameplate and push-buttons are illuminated by colour-adjustable LED lighting located at the top of the box.
By pressing a button, the visitor dials the telephone number assigned to the relevant flat. A maximum of 8 telephone numbers can be programmed into the device. A round-robin call function can also be set up: depending on the selected mode, either all specified contacts must be reached, or the first person to answer can stop further calls. Both the ring time and talk time can be adjusted. During a call, the mobile phone's 4 and 6 buttons can be used to open, for example, the side gate and the main gate, or to operate the barrier, without interrupting the call.



The Kit Emergency version features a red plastic housing with 'FIRE' lettering, designed for external wall mounting, so that the emergency call device is clearly recognisable from a distance. The colour and lettering of the housing can be customised, allowing the appearance to be adapted to the location of use. The Kit Forest is a green outdoor housing version, providing intercom communication in forest environments. Both models are available in GSM and 4G versions.

InterCom GSM Monitoring Set / InterCom 4G Monitoring Set



The Monitoring Set is a box-style assembly that can be installed behind an existing or custom front panel, and includes a separately mountable microphone and loudspeaker. This design allows the audio components to be mounted in accordance with the site's specific conditions, whilst the central unit is housed in a protected location.
It can also be used to upgrade an existing doorphone, to set up a bespoke call system, or to be integrated alongside a lift control unit. A correctly positioned microphone and loudspeaker enable direct conversation between the person on site and the called party. In remote monitoring applications, an event alert may be followed by a voice call, so that the situation can be clarified verbally once the alert has been received.

InterCom GSM Emergency Caller / InterCom 4G Emergency Caller



The Emergency Caller is a push-button emergency call device with its own built-in microphone and loudspeaker, which can be used independently of the local control system. It is available in both wall-mounted and recessed versions, so the installation method can be adapted to the site.
When the emergency button is pressed, the device calls the pre-set contact numbers and establishes a two-way audio connection with, for example, a reception desk, a monitoring centre or a person providing assistance. Up to 8 contact numbers can be set, with adjustable ring times. The transmission of a remote monitoring signal can also be followed by a voice call. The design is suitable for use in lifts, entrances, barriers and other locations where an easily accessible, simple-to-use emergency call option is required.

Technical specifications

- Supply voltage: 9–24 VDC
- Standby current consumption: 40 mA + outdoor unit
- Maximum current consumption: 400 mA
- Relay output load capacity: max. 30 V / 500 mA
- 2G module type: SIMCOM 900
- 2G GSM frequencies: GSM 850 / EGSM 900 / DCS 1800 / PCS 1900 (Multi-Band)
- 4G module type: SIM5300EA
- 4G frequencies: TDD-LTE B38/B40/B41, FDD-LTE B1/B3/B5/B7/B8/B20, WCDMA/HSDPA/HSPA+ B1/B5/B8, GSM/GPRS/EDGE 900/1800 MHz
- SIM card usage: network-independent GSM module
- GSM antenna type: SMA connector (included in the pack); must be positioned at least 1 metre away from the device (DO NOT place on or near the device!)
- Intercom dimensions (width x height x depth at the bottom / depth at the top):
  1-button: 90 x 174 x 45/71 (mm)
  2-button: 90 x 174 x 45/71 (mm)
  4-button: 90 x 199 x 45/71 (mm)
  Monitoring Set dimensions: (width x length x depth): 58 x 92 x 27 (mm)
- Packaging dimensions (length x width x height):
  Doorphone and Emergency Caller: 205 x 98 x 112 (mm)
  Monitoring Set: 128 x 130 x 30 (mm)
- Operating temperature: -20°C to +50°C